INDEX	CHANGES	DATE	NAME

MEGA-STEP-DRILL-STEEL

30° HELICAL FLUTE

R

CUT MAT HP358

MAT SEE CATLAOG

WITH I.C.

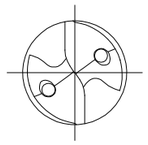

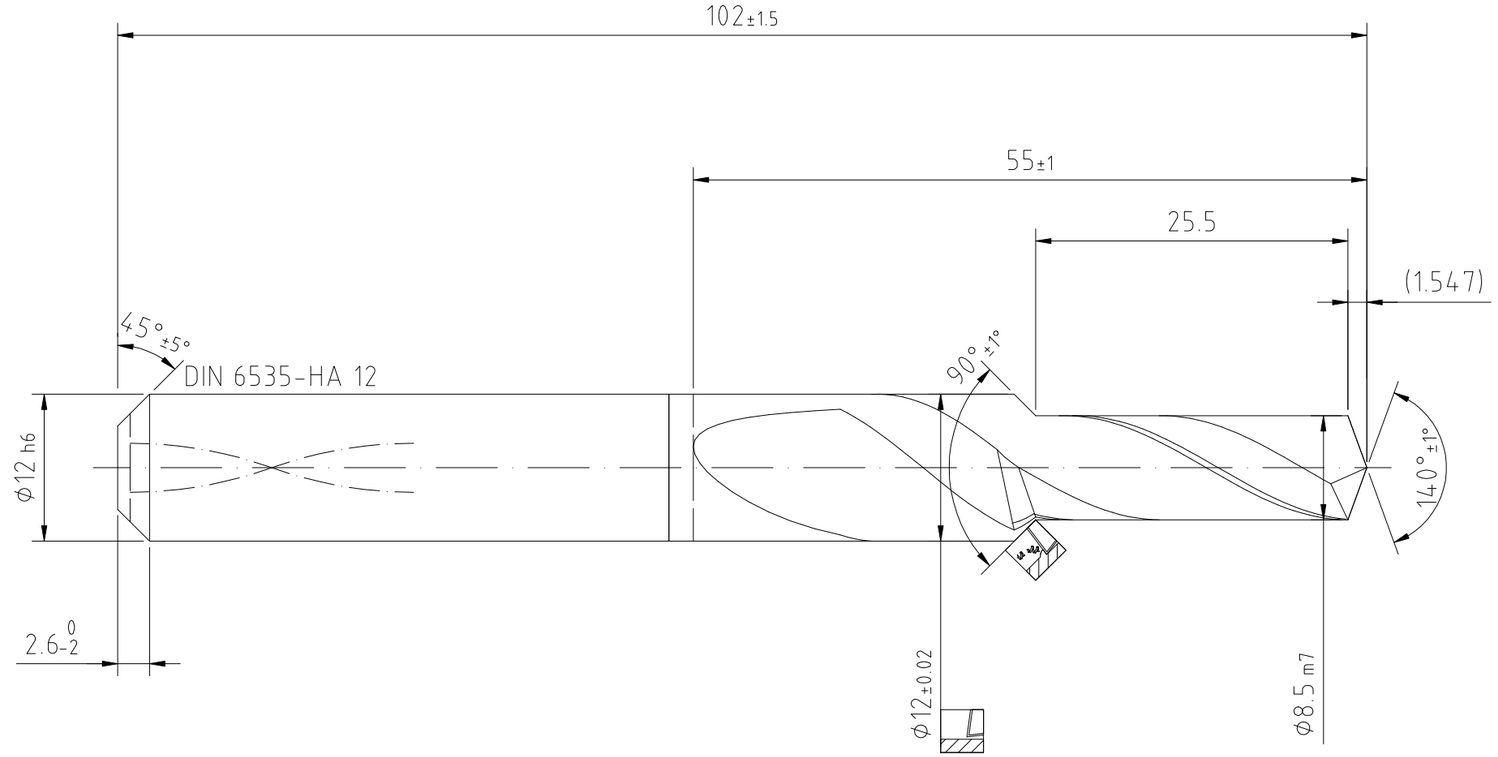

COMPONENT			
PART FEATURE			
CUSTOMER COMPONENT REFERENCE			
WORKPIECE MATERIAL	TOOL-NO.	OP-NO.	
SEE TOOL CATALOG			

MAPAL ©
FABRIK FUER PRAEZISIONSWERKZEUGE DR. KRESS KG

ALL RIGHTS FOR THE INVENTIONS, KNOW-HOW, TECHNICAL SOLUTIONS AND DESIGNS SHOWN ON THE DRAWING ARE ENTITLED TO MAPAL ONLY. AS FAR AS MAPAL DID NOT REGISTER PROPERTY RIGHTS HEREUPON YET, MAPAL FORMALLY RESERVES THE RIGHT FOR THE REGISTRATION OF PROPERTY RIGHTS. THE DRAWING AS WELL AS THE MATTERS SHOWN ARE STRICTLY CONFIDENTIAL. REPRODUCTIONS MAY ONLY BE MADE FOR THE PURPOSE AGREED UPON. NEITHER THIS DRAWING NOR COPIES THEREOF MAY BE MADE ACCESSIBLE TO THIRD PARTIES. WITH THE DELIVERY OF THIS DRAWING NO RIGHT TO USE IT FOR ANY PURPOSE IS GRANTED. VIOLATIONS AGAINST THE OBLIGATIONS TO SECRECY AND USE RESTRICTIONS WILL BE PROSECUTED.

TITLE
MEGA-STEP-DRILL-STEEL-PLUS, SHANKFORM HAK, COATED

FORMAT: A3

MAPAL Präzisionswerkzeuge Dr. Kress KG

DATE OF ISSUE	CREATED	DOCUMENT	INDEX
2024-06-05	SKO	608097983-000-00-ED1	00
DATE	APPROVED	MATERIAL NUMBER	ORIGIN
		31140995	ALD
	SCALE	TECHNICAL SPECIFICATION	SHEET
	2:1	SCD591-0850-2-2-140HA-HP358	1/1

GENERAL TOLERANCE ISO 2768-mH
SIZE ISO 14405-1 Ⓔ
DIMENSIONS NOT SHOWN ARE MAPAL STANDARDS

BLATT/MAP/S.A3