SPARE PARTS / ALLOCATION OF PARTS / DIAMETER	INDEX NO.	CHANGES	DATE	NAME

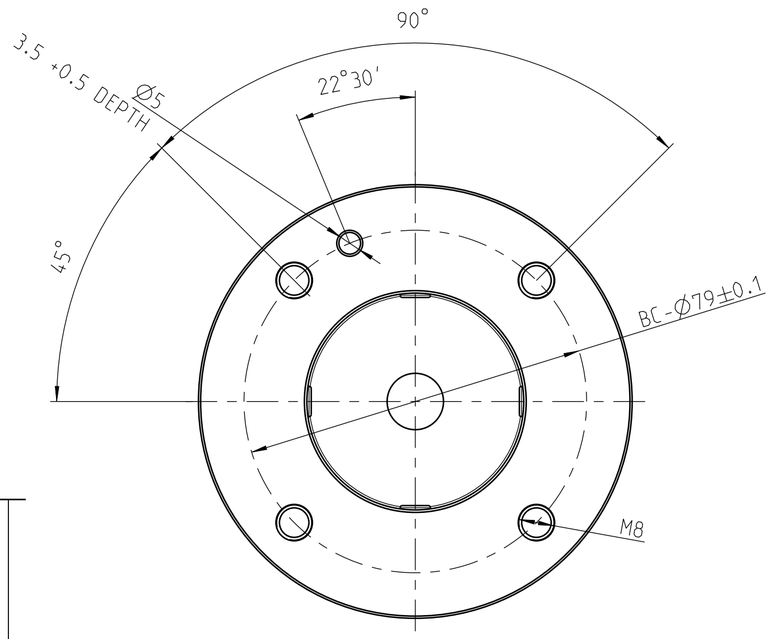

MN683-AD50-FC
PER MN683-BL2

MODUL 100
MN5000-14

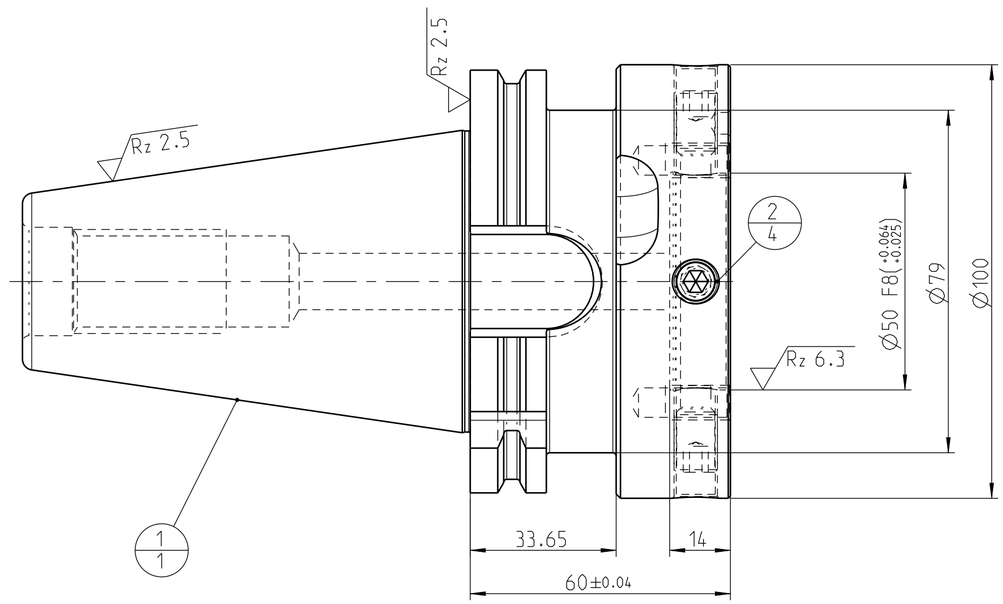

POSITION OF CUTTING EDGE
FOR TOOL WITH SINGLE CUTTING EDGE

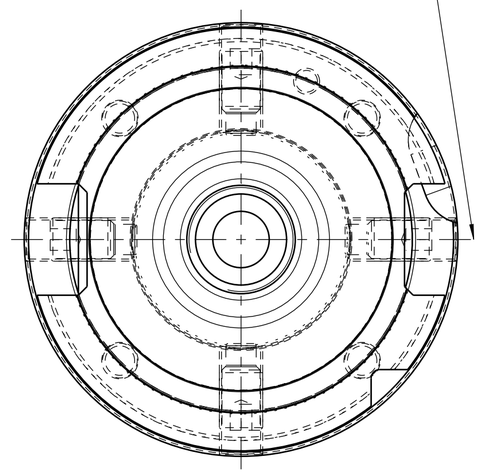

Rz 25 (Rz 6.3 Rz 2.5)

CASE HARDENED HRC 60 ±2
DEPTH OF CASEHARDENING 0.8
THREAD SOFT

PART	TYP	QUAN.	UT	MATERIAL NUMBER	DESCRIPTION	TECHNICAL SPECIFICATION	CUSTOMER NUMBER
2		4		10075099	THREADED PIN	S.ISO 4028-M10X1X20-45H-KLF	
1		1			BODY		

BALANCE GRADE DIN ISO 1940-G 6.3
(COMPLETE ASSEMBLY)
AT 3000 MIN^{-1}

ADDITIONALLY TO VA-NO. 07.05.01 MARK WITH:

THIS DRAWING REMAINS OUR EXCLUSIVE PROPERTY.
IT IS ENTRUSTED ONLY FOR THE PURPOSE AGREED UPON AND MAY NOT BE USED FOR ANY OTHER PURPOSE. COPIES OR OTHER REPRODUCTIONS MAY ONLY BE MADE FOR THE PURPOSE AGREED UPON.
NEITHER ORIGINALS NOR REPRODUCTIONS MAY BE TRANSMITTED OR OTHERWISE MADE ACCESSIBLE TO A THIRD PARTY WITHOUT OUR WRITTEN CONSENT.

DIMENSIONAL TOLERANCES PER ISO 2768-F UNLESS OTHERWISE SPECIFIED

DIMENSIONS NOT SHOWN ARE MAPAL STANDARDS

MAPAL
Präzisionswerkzeuge
Dr. Kress KG

REGISTERED WITH GERMAN AND FOREIGN PATENT OFFICES

	DATE	NAME
DRAWN	02.10.14	BRT
CHK.		
APP.		
SCALE: 1:1		A2

TITLE:
STEEP TAPER ADAPTOR, FORM AD, WITH CONTACT FACE

ORIGIN: AA1

TECHNICAL SPECIFICATION: OS-AD-AD-FC050-MOD100-060-11

MATERIAL NUMBER: 30630803

DRAWING NO.: 606355621-001-00-ED1

INDEX: 00

REPLACES DWG. NO.:

REPLACED BY DWG. NO.:

SHEET 1 OF 1 SHEETS

MACH.-NO.:	STATION:	SPINDLE:
PART-NAME:		
PART-NO.:		
MATERIAL:		
TOOL-NO.:	OP-NO.:	HOLE-NO.:

CUSTOMER:
SIMILAR:
JOB-NO.:
PROJECT-NO.:
SKETCH:
BARCODE-ZONE