INDEX	CHANGES	DATE	NAME

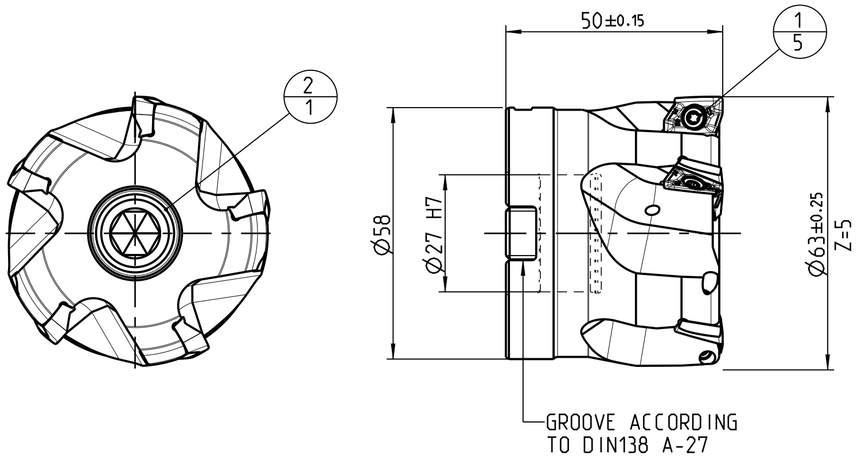

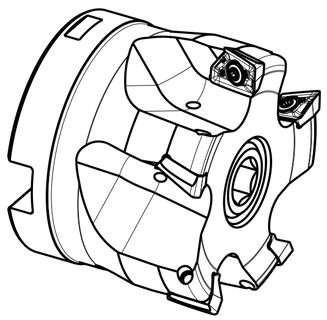

PART	TYP	QUAN.	UT	MATERIAL NUMBER	DESCRIPTION	TECHNICAL SPECIFICATION	CUSTOMER NUMBER
2		1		10003677	SOCKET HEAD SCREW	ISO 4762-M12X35-12.9	--
1		5		30979520	TORX-SCREW	MN659 M3.5X8.1-TX10-IP	--

SCOPE OF DELIVERY INFORMATION
INSERTS NOT INCLUDED

TIGHTENING TORQUE FOR MAPAL CLAMPING SCREWS
PER MN678BL1

MAPAL ©
FABRIK FUER PRAEZISIONSWERKZEUGE DR. KRESS KG

TITLE
90° FORM FACE CUTTER, INDEXABLE INSERTS

FORMAT: A2

ALL RIGHTS FOR THE INVENTIONS, KNOW-HOW, TECHNICAL SOLUTIONS AND DESIGNS SHOWN ON THE DRAWING ARE ENTITLED TO MAPAL ONLY. AS FAR AS MAPAL DID NOT REGISTER PROPERTY RIGHTS HEREUPON YET, MAPAL FORMALLY RESERVES THE RIGHT FOR THE REGISTRATION OF PROPERTY RIGHTS. THE DRAWING AS WELL AS THE MATTERS SHOWN ARE STRICTLY CONFIDENTIAL. REPRODUCTIONS MAY ONLY BE MADE FOR THE PURPOSE AGREED UPON. NEITHER THIS DRAWING NOR COPIES THEREOF MAY BE MADE ACCESSIBLE TO THIRD PARTIES. WITH THE DELIVERY OF THIS DRAWING NO RIGHT TO USE IT FOR ANY PURPOSE IS GRANTED. VIOLATIONS AGAINST THE OBLIGATIONS TO SECRECY AND USE RESTRICTIONS WILL BE PROSECUTED.

MAPAL
Präzisionswerkzeuge
Dr. Kress KG

DATE OF ISSUE	CREATED	DOCUMENT	INDEX
2021-09-22	UNO	607614150-000-00-ED1	00
DATE	APPROVED	MATERIAL NUMBER	ORIGIN
		31281110	AAD

SCALE	TECHNICAL SPECIFICATION	SHEET
1:1	ICM901-063-CA27-Z05R-XP_T11	1/1

GENERAL TOLERANCE ISO 2768-fH
SIZE ISO 14405-1 Ⓔ

DIMENSIONS NOT SHOWN
ARE MAPAL STANDARDS

BALANCE GRADE PER DIN ISO 21940-11
G 6.3 / 3000 min^{-1} — S

MASS
APPROX. 0.7 kg

QUOTE	DESIGN ORDER NO.	SKETCH	SIMILAR	DEBTOR/CUSTOMER NO.	DEBTOR NAME/CUSTOMER NAME
XPKT-FRAESER ST	2100076659			400013	MAPAL DR. KRESS KG