INDEX	CHANGES	DATE	NAME

BARCODE-ZONE

DEBTOR NAME/ CUSTOMER NAME
MAPAL DR. KRESS KG

DEBTOR/ CUSTOMER NO.
400013

SIMILAR

SKETCH

DESIGN ORDER NO.
2100094766

QUOTE

OPTIMILL-UNI-HPC-POCKET

~42° HELICAL AT ⌀5.7

CUT MAT HP920

MAT SEE CATALOGUE

WITHOUT I.C.

SC 5:1

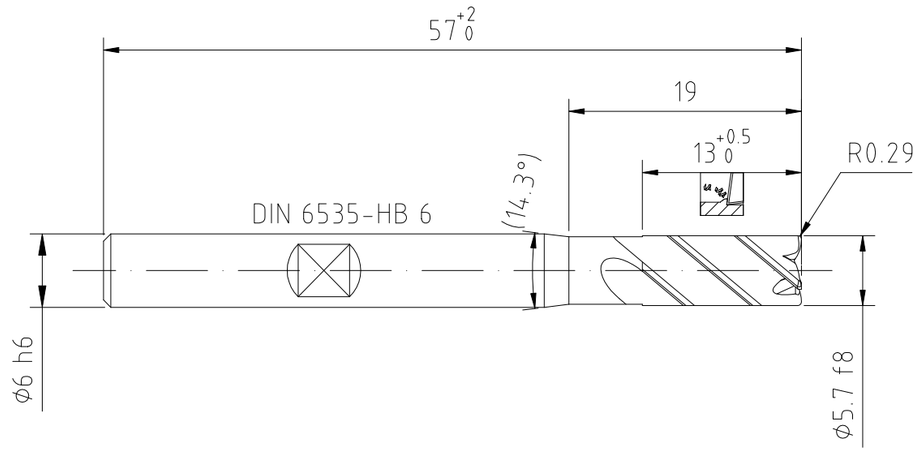

MAPAL ©
FABRIK FUER PRAEZISIONSWERKZEUGE DR. KRESS KG

ALL RIGHTS FOR THE INVENTIONS, KNOW-HOW, TECHNICAL SOLUTIONS AND DESIGNS SHOWN ON THE DRAWING ARE ENTITLED TO MAPAL ONLY. AS FAR AS MAPAL DID NOT REGISTER PROPERTY RIGHTS HEREUPON YET, MAPAL FORMALLY RESERVES THE RIGHT FOR THE REGISTRATION OF PROPERTY RIGHTS. THE DRAWING AS WELL AS THE MATTERS SHOWN ARE STRICTLY CONFIDENTIAL. REPRODUCTIONS MAY ONLY BE MADE FOR THE PURPOSE AGREED UPON. NEITHER THIS DRAWING NOR COPIES THEREOF MAY BE MADE ACCESSIBLE TO THIRD PARTIES. WITH THE DELIVERY OF THIS DRAWING NO RIGHT TO USE IT FOR ANY PURPOSE IS GRANTED. VIOLATIONS AGAINST THE OBLIGATIONS TO SECRECY AND USE RESTRICTIONS WILL BE PROSECUTED.

MAPAL Präzisionswerkzeuge Dr. Kress KG

GENERAL TOLERANCE ISO 2768-mH
SIZE ISO 14405-1 Ⓔ
DIMENSIONS NOT SHOWN ARE MAPAL STANDARDS

TITLE
OPTIMILL-UNI-HPC-POCKET, SHANK FORM HB, SC, COATED

DATE OF ISSUE	CREATED	DOCUMENT	FORMAT
2022-10-18	KSA	607804197-000-00-ED1	A3
DATE	APPROVED	MATERIAL NUMBER	INDEX
		30788023	00
			ORIGIN
			ALD
SCALE	TECHNICAL SPECIFICATION		SHEET
2:1	SCM810-0570Z03R-R0029HB-HP920		1/1

BLATT/MAP/S.A3