INDEX	CHANGES	DATE	NAME

MODULAR CONNECTION HSK-A63
(SIMILAR DIN 69893-1)
PER MN609 SHEET 2-4

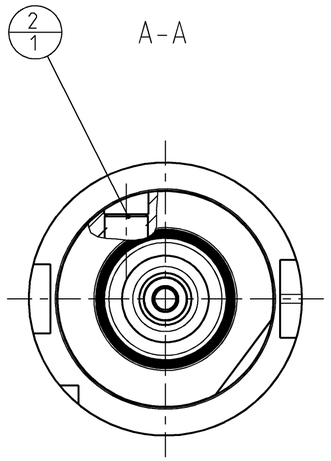

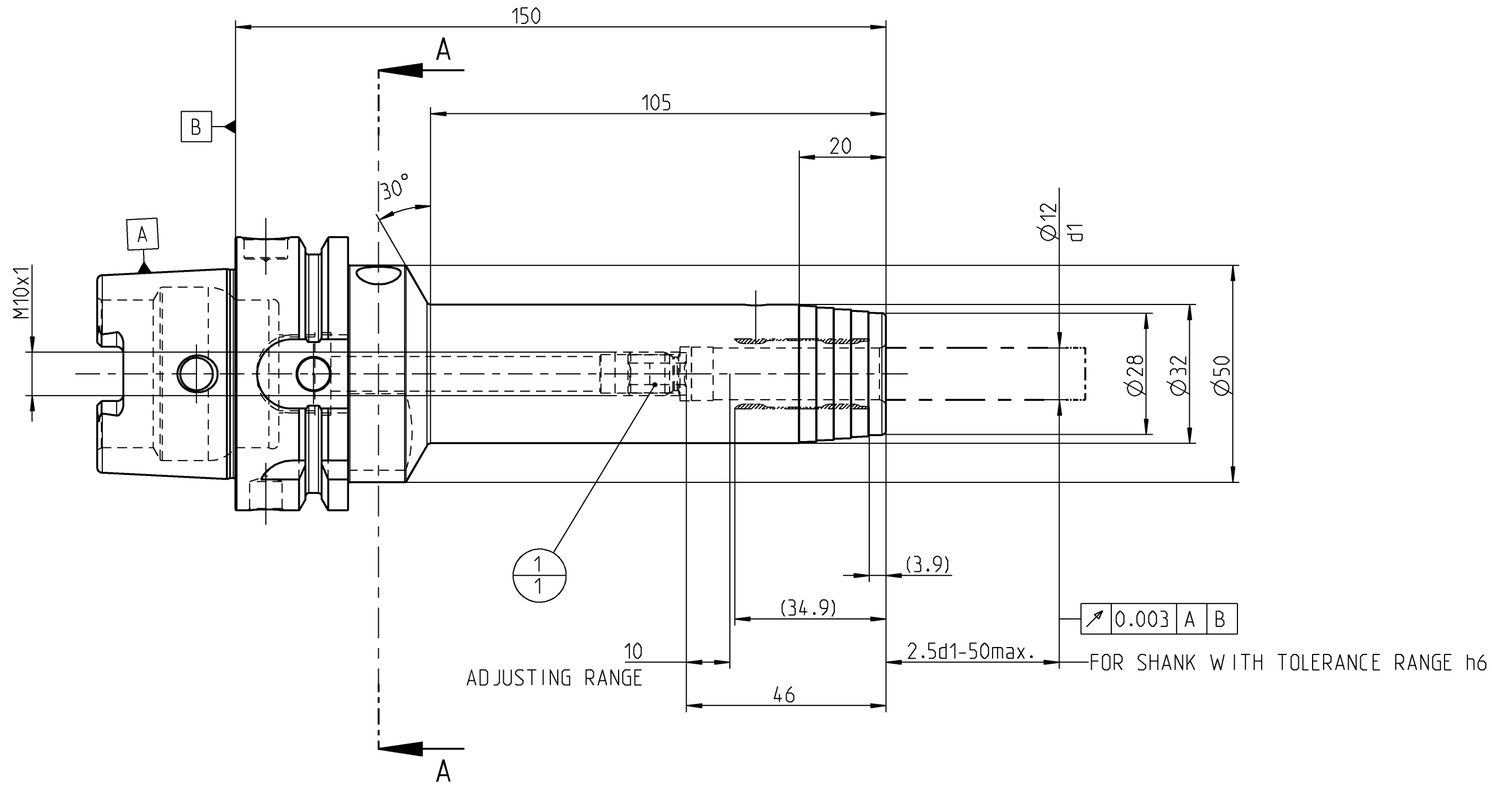

PART	TYP	QUAN.	UT	MATERIAL NUMBER	DESCRIPTION	TECHNICAL SPECIFICATION	CUSTOMER NUMBER
2		1		10007041	THREADED PIN	S.ISO 4026-M10X1X12-45H	...
1		1		30252542	STOP SCREW	M10X1 SW5	...

MAPAL ©
FABRIK FUER PRAEZISIONSWERKZEUGE DR. KRESS KG

ALL RIGHTS FOR THE INVENTIONS, KNOW-HOW, TECHNICAL SOLUTIONS AND DESIGNS SHOWN ON THE DRAWING ARE ENTITLED TO MAPAL ONLY. AS FAR AS MAPAL DID NOT REGISTER PROPERTY RIGHTS HEREUPON YET, MAPAL FORMALLY RESERVES THE RIGHT FOR THE REGISTRATION OF PROPERTY RIGHTS. THE DRAWING AS WELL AS THE MATTERS SHOWN ARE STRICTLY CONFIDENTIAL. REPRODUCTIONS MAY ONLY BE MADE FOR THE PURPOSE AGREED UPON. NEITHER THIS DRAWING NOR COPIES THEREOF MAY BE MADE ACCESSIBLE TO THIRD PARTIES. WITH THE DELIVERY OF THIS DRAWING NO RIGHT TO USE IT FOR ANY PURPOSE IS GRANTED. VIOLATIONS AGAINST THE OBLIGATIONS TO SECRECY AND USE RESTRICTIONS WILL BE PROSECUTED.

BALANCE GRADE PER DIN ISO 21940-11
G 2,5 / 25000 MIN^{-1}

TITLE
HYDROCHUCK, HSK, LONG SLIM DESIGN

FORMAT: A2

MAPAL Präzisionswerkzeuge Dr. Kress KG

DATE OF ISSUE	CREATED	DOCUMENT	INDEX
2020-06-25	SMU	607433728-000-00-ED1	00
DATE	APPROVED	MATERIAL NUMBER	ORIGIN
		30251147	EHD

GENERAL TOLERANCE ISO 2768-fH
SIZE ISO 14405-1 E
DIMENSIONS NOT SHOWN ARE MAPAL STANDARDS

SCALE: 1:1

TECHNICAL SPECIFICATION: MHC-HSK-A063-12-150-1-0-A

SHEET: 1/1

30251147 CH#KHYDR-MHC-HSK-A063-12-150-1-0-A

607433728-000-00-ED1 / EHD / 30 / GültIg / 11.03.2025 / MUEHLERST1