CLAMPING		SPARE PARTS / ALLOCATION OF PARTS / DIAMETER
–	1	40
–	–	–
–	–	–
–	–	–
–	–	–

INDEX	CHANGES	DATE	NAME

UNEQUAL POSITIONING

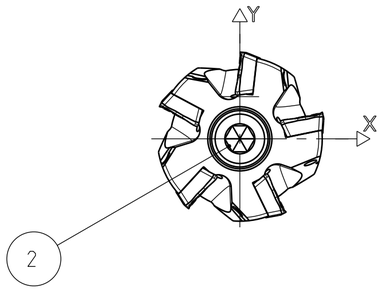

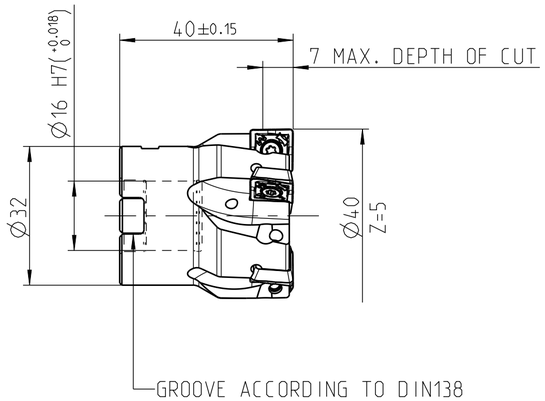

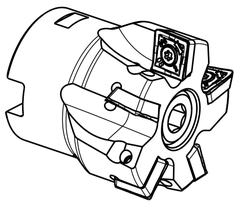

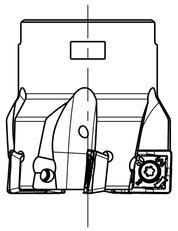

PART	TYP	QUAN.	UT	MATERIAL NUMBER	DESCRIPTION	TECHNICAL SPECIFICATION	CUSTOMER NUMBER
-	OPT	1		31006779	SOCKET HEAD SCREW	MN692BL4-M8X30-12.9-IK	''
2		1		10003638	SOCKET HEAD SCREW	ISO 4762-M8X30-12.9	''
1		5		10105075	TORX-SCREW	MN659 M3X7.5-TX8-IP	''

SCOPE OF DELIVERY INFORMATION
INSERTS NOT INCLUDED

BOM INFORMATION
OPTIONAL PARTS (OPT) NOT INCLUDED SCOPE OF DELIVERY

TIGHTENING TORQUE FOR MAPAL CLAMPING SCREWS
PER MN678BL1

MAPAL ©
FABRIK FUER PRAEZISIONSWERKZEUGE DR. KRESS KG

ALL RIGHTS FOR THE INVENTIONS, KNOW-HOW, TECHNICAL SOLUTIONS AND DESIGNS SHOWN ON THE DRAWING ARE ENTITLED TO MAPAL ONLY. AS FAR AS MAPAL DID NOT REGISTER PROPERTY RIGHTS HEREUPON YET, MAPAL FORMALLY RESERVES THE RIGHT FOR THE REGISTRATION OF PROPERTY RIGHTS. THE DRAWING AS WELL AS THE MATTERS SHOWN ARE STRICTLY CONFIDENTIAL. REPRODUCTIONS MAY ONLY BE MADE FOR THE PURPOSE AGREED UPON. NEITHER THIS DRAWING NOR COPIES THEREOF MAY BE MADE ACCESSIBLE TO THIRD PARTIES. WITH THE DELIVERY OF THIS DRAWING NO RIGHT TO USE IT FOR ANY PURPOSE IS GRANTED. VIOLATIONS AGAINST THE OBLIGATIONS TO SECRECY AND USE RESTRICTIONS WILL BE PROSECUTED.

TITLE
RADIAL MILLING PROGRAMME, BODY

FORMAT: A2

MAPAL Präzisionswerkzeuge Dr. Kress KG

DATE OF ISSUE	CREATED	DOCUMENT	INDEX
2019-01-18	ANS	607040996-000-01-ED1	00
DATE	APPROVED	MATERIAL NUMBER	ORIGIN
		31002262	AAD

GENERAL TOLERANCE ISO 2768-fH-Ⓔ
SIZE ISO 14405 Ⓔ
DIMENSIONS NOT SHOWN ARE MAPAL STANDARDS

SCALE: 1:1

TECHNICAL SPECIFICATION: ICM901-040-CA16-Z05R-SD_T10

SHEET: 1/1

BALANCE GRADE PER DIN ISO 21940-11
G 6.3 / 3000 min^{-1}

MASS
APPROX. 0.2 kg