INDEX	CHANGES	DATE	NAME

OPTIMILL-UNI-HPC-PLUS

36° HELICAL AT ⌀10

CUT MAT: HP920

MAT: SEE CATALOG

WITHOUT I.C.

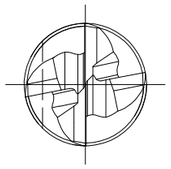

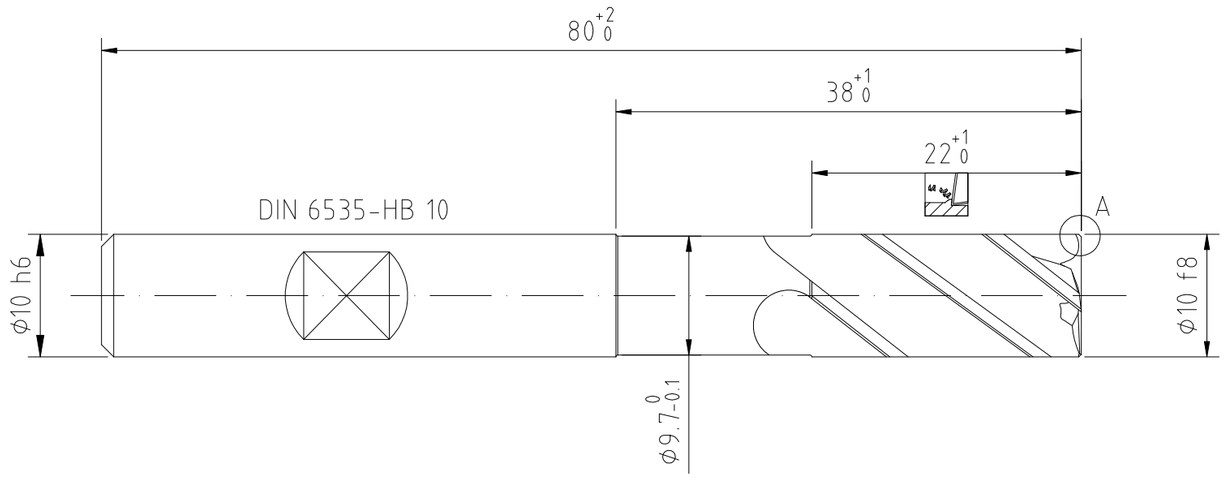

DETAIL A
SC 10:1

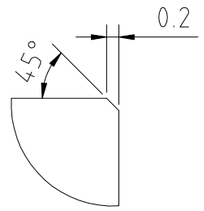

MAPAL ©
FABRIK FUER PRAEZISIONSWERKZEUGE DR. KRESS KG

ALL RIGHTS FOR THE INVENTIONS, KNOW-HOW, TECHNICAL SOLUTIONS AND DESIGNS SHOWN ON THE DRAWING ARE ENTITLED TO MAPAL ONLY. AS FAR AS MAPAL DID NOT REGISTER PROPERTY RIGHTS HEREUPON YET, MAPAL FORMALLY RESERVES THE RIGHT FOR THE REGISTRATION OF PROPERTY RIGHTS. THE DRAWING AS WELL AS THE MATTERS SHOWN ARE STRICTLY CONFIDENTIAL. REPRODUCTIONS MAY ONLY BE MADE FOR THE PURPOSE AGREED UPON. NEITHER THIS DRAWING NOR COPIES THEREOF MAY BE MADE ACCESSIBLE TO THIRD PARTIES. WITH THE DELIVERY OF THIS DRAWING NO RIGHT TO USE IT FOR ANY PURPOSE IS GRANTED. VIOLATIONS AGAINST THE OBLIGATIONS TO SECRECY AND USE RESTRICTIONS WILL BE PROSECUTED.

TITLE: OPTIMILL-UNI-HPC-PLUS, SHANKFORM HB, COATED

MAPAL Präzisionswerkzeuge Dr. Kress KG

GENERAL TOLERANCE ISO 2768-mH
SIZE ISO 14405-1 Ⓔ
DIMENSIONS NOT SHOWN ARE MAPAL STANDARDS

DATE OF ISSUE	CREATED	DOCUMENT	FORMAT
2022-03-28	KSA	607696213-000-00-ED1	A3
DATE	APPROVED	MATERIAL NUMBER	INDEX
		30652411	00
			ORIGIN
			ALD
	SCALE	TECHNICAL SPECIFICATION	SHEET
	2:1	SCM720-1000Z04R-F0020HB-HP920	1/1

BLATT/MAP/S.A3