INDEX	CHANGES	DATE	NAME

NON TOLERANCED DIMENSIONS					
0.5 ...3	> 3 ...6	> 6 ...30	> 30 ..120	> 120 ..400	> 400 1000
± 0.1	± 0.1	± 0.2	± 0.3	± 0.5	± 0.8
RADII, CHAMFERS					
± 0.2	± 0.5	± 1	± 1	± 1	± 1
ANGLES, DIM. OF THE SHORTER SIDE					
bis 10	> 10 ...50	> 50 ...120	> 120 ...400	> 400	
± 1°	± 30'	± 20'	± 10'	± 5'	

OPTIMILL-3D-CR,Z=4

HP803

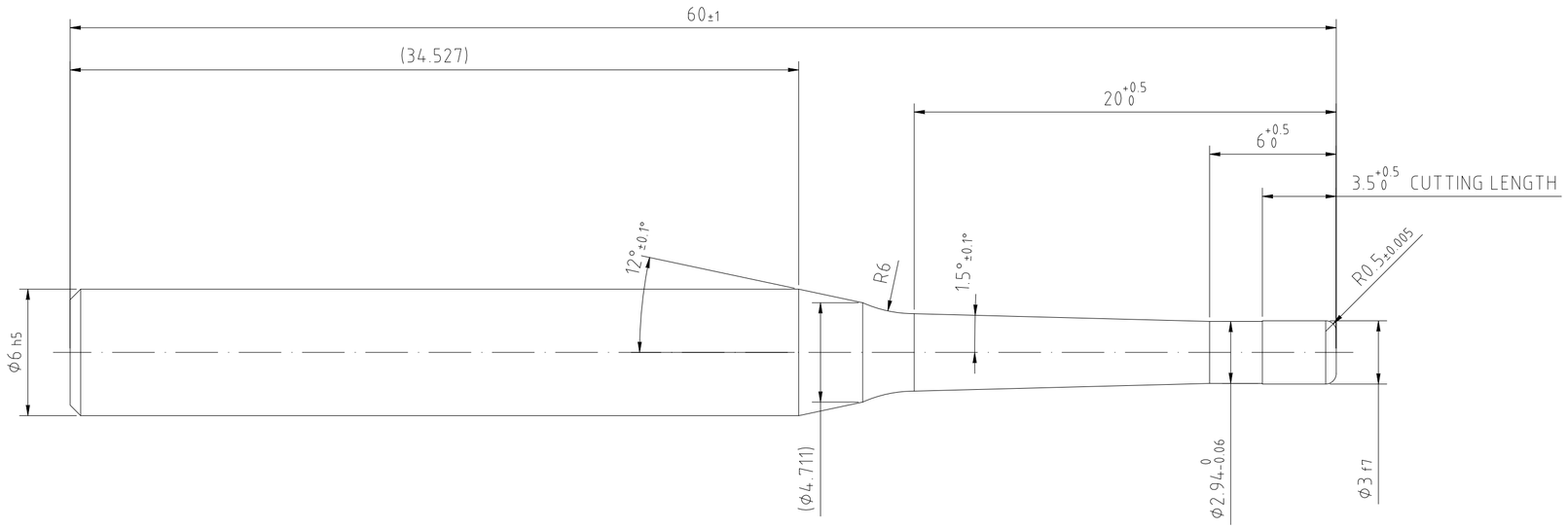

M 10:1

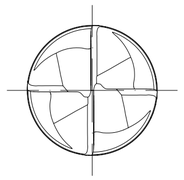

REGRINDING INFO	
TIP	○
OUTER DIAMETER	○
FLUTE	○
ADDING OF WORKING LENGTH	○
ADDING OF WORKING DIAMETER	○
DECOATING	○

● YES ◐ OPTIONAL ○ NO

MAPAL ©
FABRIK FUER PRAEZISIONSWERKZEUGE DR. KRESS KG

ALL RIGHTS FOR THE INVENTIONS, KNOW-HOW, TECHNICAL SOLUTIONS AND DESIGNS SHOWN ON THE DRAWING ARE ENTITLED TO MAPAL ONLY. AS FAR AS MAPAL DID NOT REGISTER PROPERTY RIGHTS HEREUPON YET, MAPAL FORMALLY RESERVES THE RIGHT FOR THE REGISTRATION OF PROPERTY RIGHTS. THE DRAWING AS WELL AS THE MATTERS SHOWN ARE STRICTLY CONFIDENTIAL. REPRODUCTIONS MAY ONLY BE MADE FOR THE PURPOSE AGREED UPON. NEITHER THIS DRAWING NOR COPIES THEREOF MAY BE MADE ACCESSIBLE TO THIRD PARTIES. WITH THE DELIVERY OF THIS DRAWING NO RIGHT TO USE IT FOR ANY PURPOSE IS GRANTED. VIOLATIONS AGAINST THE OBLIGATIONS TO SECRECY AND USE RESTRICTIONS WILL BE PROSECUTED.

MAPAL
Präzisionswerkzeuge
Dr. Kress KG

GENERAL TOLERANCE ISO 2768-mH
SIZE ISO 14405-1 Ⓔ
DIMENSIONS NOT SHOWN ARE MAPAL STANDARDS

TITLE	FORMAT
OPTIMILL-3D-CR, SHANKFORM HA, SC, COATED	A2

DATE OF ISSUE	CREATED	DOCUMENT	INDEX
2021-11-25	MF	607409961-000-01-ED1	00
DATE	APPROVED	MATERIAL NUMBER	ORIGIN
		31154372	AAD

SCALE	TECHNICAL SPECIFICATION	SHEET
5:1	MCR105-030-0050-2000C060-HP803	1/1

BLATT/MAP/S.A2