INDEX	CHANGES	DATE	NAME

NON TOLERANCED DIMENSIONS

0.5 ...3	> 3 ...6	> 6 ...30	> 30 ...120	> 120 ...400	> 400 1000
± 0.1	± 0.1	± 0.2	± 0.3	± 0.5	± 0.8

RADII, CHAMFERS

± 0.2	± 0.5	± 1	± 1	± 1	± 1

ANGLES, DIM. OF THE SHORTER SIDE

bis 10	> 10 ...50	> 50 ...120	> 120 ...400	> 400
± 1°	± 30'	± 20'	± 10'	± 5'

MEGA-180°-DRILL-ALU	
30° HELICAL AT ⌀ 8.5	
CUT MAT	HU630
MAT	SEE TOOL CATALOG
	WITH I.C.

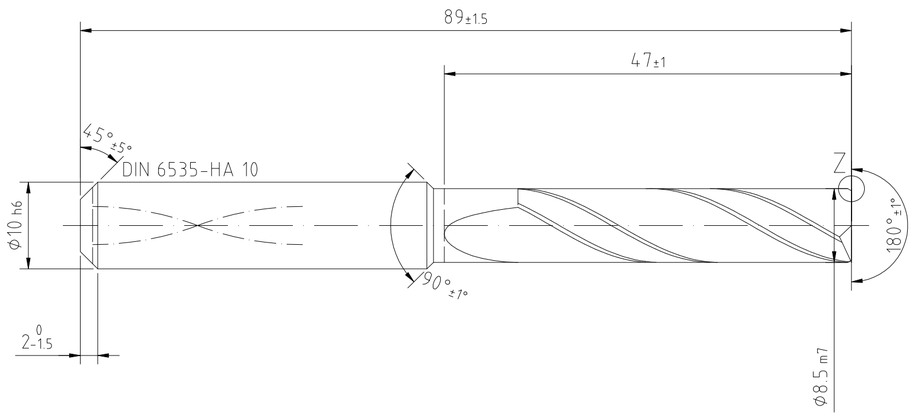

DETAIL Z 10:1

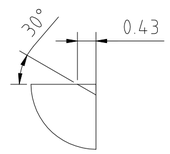

COMPONENT		MAPAL © FABRIK FUER PRAEZISIONSWERKZEUGE DR. KRESS KG	TITLE MEGA-DRILL-180°, SHANK FORM HAK, UNCOATED
PART FEATURE		ALL RIGHTS FOR THE INVENTIONS, KNOW-HOW, TECHNICAL SOLUTIONS AND DESIGNS SHOWN ON THE DRAWING ARE ENTITLED TO MAPAL ONLY. AS FAR AS MAPAL DID NOT REGISTER PROPERTY RIGHTS HEREUPON YET, MAPAL FORMALLY RESERVES THE RIGHT FOR THE REGISTRATION OF PROPERTY RIGHTS. THE DRAWING AS WELL AS THE MATTERS SHOWN ARE STRICTLY CONFIDENTIAL. REPRODUCTIONS MAY ONLY BE MADE FOR THE PURPOSE AGREED UPON. NEITHER THIS DRAWING NOR COPIES THEREOF MAY BE MADE ACCESSIBLE TO THIRD PARTIES, WITH THE DELIVERY OF THIS DRAWING NO RIGHT TO USE IT FOR ANY PURPOSE IS GRANTED. VIOLATIONS AGAINST THE OBLIGATIONS TO SECRECY AND USE RESTRICTIONS WILL BE PROSECUTED.	MAPAL Präzisionswerkzeuge Dr. Kress KG
CUSTOMER COMPONENT REFERENCE			
WORKPIECE MATERIAL: SEE TOOL CATALOG	TOOL-NO. / OP-NO.		GENERAL TOLERANCE ISO 2768-mH; SIZE ISO 14405-1 Ⓔ; DIMENSIONS NOT SHOWN ARE MAPAL STANDARDS

DATE OF ISSUE	CREATED	DOCUMENT	INDEX	FORMAT
2023-10-09	CJ	608001820-000-00-ED1	00	A2
DATE	APPROVED	MATERIAL NUMBER	ORIGIN	
		30382940	ALD	
GENERAL TOLERANCE ISO 2768-mH		SCALE	TECHNICAL SPECIFICATION	SHEET
		2:1	SCD241-0850-2-4-180HA03-HU630	1/1

BLATT/MAP/S.A2