INDEX	CHANGES	DATE	NAME

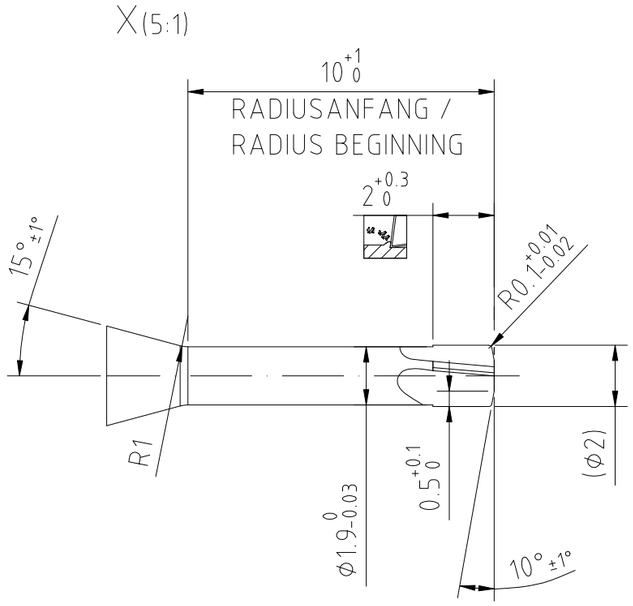

OPTIMILL-3D-HF

HP806

NON TOLERANCED DIMENSIONS					
0.5 ...3	> 3 ...6	> 6 ...30	> 30 ..120	> 120 ..400	> 400 .1000
± 0.1	± 0.1	± 0.2	± 0.3	± 0.5	± 0.8
RADII, CHAMFERS					
± 0.2	± 0.5	± 1	± 1	± 1	± 1
ANGLES, DIM. OF THE SHORTER SIDE					
bis 10	> 10 ...50	> 50 ...120	> 120 ...400	> 400	
± 1°	± 30'	± 20'	± 10'	± 5'	

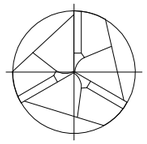

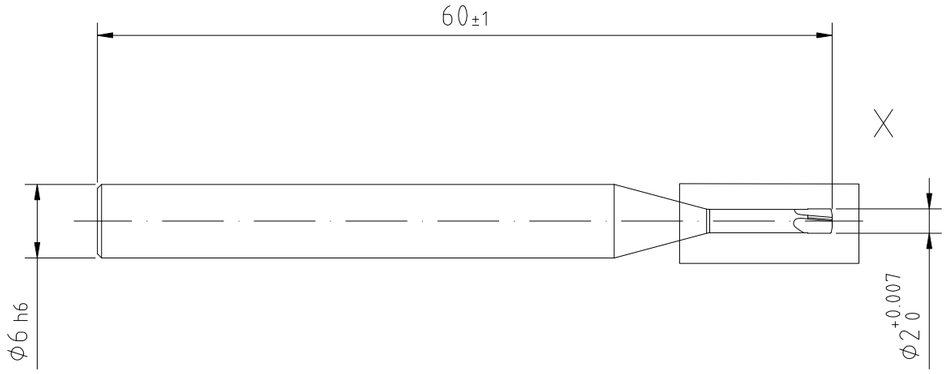

REGRINDING INFO	
TIP	○
OUTER DIAMETER	○
FLUTE	○
ADDING OF WORKING LENGTH	○
ADDING OF WORKING DIAMETER	○
DECOATING	○

● YES ◐ OPTIONAL ○ NO

MAPAL ©
FABRIK FUER PRAEZISIONSWERKZEUGE DR. KRESS KG

ALL RIGHTS FOR THE INVENTIONS, KNOW-HOW, TECHNICAL SOLUTIONS AND DESIGNS SHOWN ON THE DRAWING ARE ENTITLED TO MAPAL ONLY. AS FAR AS MAPAL DID NOT REGISTER PROPERTY RIGHTS HEREUPON YET, MAPAL FORMALLY RESERVES THE RIGHT FOR THE REGISTRATION OF PROPERTY RIGHTS. THE DRAWING AS WELL AS THE MATTERS SHOWN ARE STRICTLY CONFIDENTIAL. REPRODUCTIONS MAY ONLY BE MADE FOR THE PURPOSE AGREED UPON. NEITHER THIS DRAWING NOR COPIES THEREOF MAY BE MADE ACCESSIBLE TO THIRD PARTIES. WITH THE DELIVERY OF THIS DRAWING NO RIGHT TO USE IT FOR ANY PURPOSE IS GRANTED. VIOLATIONS AGAINST THE OBLIGATIONS TO SECRECY AND USE RESTRICTIONS WILL BE PROSECUTED.

MAPAL Präzisionswerkzeuge Dr. Kress KG

GENERAL TOLERANCE ISO 2768-mH
SIZE ISO 14405-1 Ⓔ
DIMENSIONS NOT SHOWN ARE MAPAL STANDARDS

TITLE				FORMAT
OPTIMILL-3D-HF, SHANKFORM HA, COATED				A3
DATE OF ISSUE	CREATED	DOCUMENT		INDEX
2023-11-30	JG	608082859-000-00-ED1		00
DATE	APPROVED	MATERIAL NUMBER		ORIGIN
		31150885		MED
	SCALE	TECHNICAL SPECIFICATION		SHEET
	2:1	MHF100-020-0150-1000X060-HP806		1/1

BLATT/MAP/S.A3