INDEX	CHANGES	DATE	NAME

NON TOLERANCED DIMENSIONS

0.5 ...3	> 3 ...6	> 6 ...30	> 30 ...120	> 120 ...400	> 400 1000
± 0.1	± 0.1	± 0.2	± 0.3	± 0.5	± 0.8

RADII, CHAMFERS

± 0.2	± 0.5	± 1	± 1	± 1	± 1

ANGLES, DIM. OF THE SHORTER SIDE

bis 10	> 10 ...50	> 50 ...120	> 120 ...400	> 400
± 1°	± 30'	± 20'	± 10'	± 5'

TRITAN-DRILL-REAMER

30° HELICAL AT ⌀ 8

CUT MAT HP358

MAT SEE TOOL CATALOG

WITH I.C.

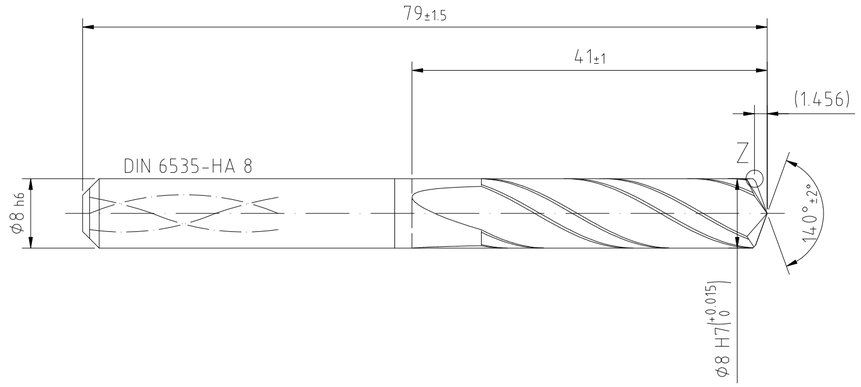

DETAIL Z 10:1

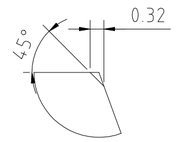

COMPONENT		MAPAL © FABRIK FUER PRAEZISIONSWERKZEUGE DR. KRESS KG	TITLE TRITAN-DRILL-REAMER, SHANKFORM HAK, COATED
PART FEATURE		ALL RIGHTS FOR THE INVENTIONS, KNOW-HOW, TECHNICAL SOLUTIONS AND DESIGNS SHOWN ON THE DRAWING ARE ENTITLED TO MAPAL ONLY. AS FAR AS MAPAL DID NOT REGISTER PROPERTY RIGHTS HEREUPON YET, MAPAL FORMALLY RESERVES THE RIGHT FOR THE REGISTRATION OF PROPERTY RIGHTS. THE DRAWING AS WELL AS THE MATTERS SHOWN ARE STRICTLY CONFIDENTIAL. REPRODUCTIONS MAY ONLY BE MADE FOR THE PURPOSE AGREED UPON. NEITHER THIS DRAWING NOR COPIES THEREOF MAY BE MADE ACCESSIBLE TO THIRD PARTIES WITH THE DELIVERY OF THIS DRAWING NO RIGHT TO USE IT FOR ANY PURPOSE IS GRANTED. VIOLATIONS AGAINST THE OBLIGATIONS TO SECRECY AND USE RESTRICTIONS WILL BE PROSECUTED.	MAPAL Präzisionswerkzeuge Dr. Kress KG
CUSTOMER COMPONENT REFERENCE			
WORKPIECE MATERIAL: SEE TOOL CATALOG	TOOL-NO.:	OP-NO.:	

DATE OF ISSUE	CREATED	DOCUMENT	INDEX
2023-10-16	CJ	608004313-000-00-ED1	00
DATE	APPROVED	MATERIAL NUMBER	ORIGIN
		31196560	ALD

GENERAL TOLERANCE ISO 2768-mH	DIMENSIONS NOT SHOWN	SCALE	TECHNICAL SPECIFICATION	SHEET
SIZE ISO 14405-1 Ⓔ	ARE MAPAL STANDARDS	2:1	SDR301-8.000H7-HA03-HP358	1/1

FORMAT A2

BLATT/MAP/S.A2