INDEX NO.	CHANGES	DATE	NAME
-	-	-	-
	-		
-	-	-	-
	-		
-	-	-	-
	-		
-	-	-	-
	-		
-	-	-	-
	-		

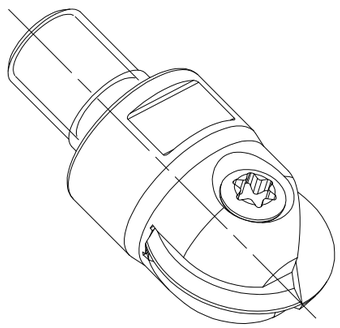

THREADED HEAD

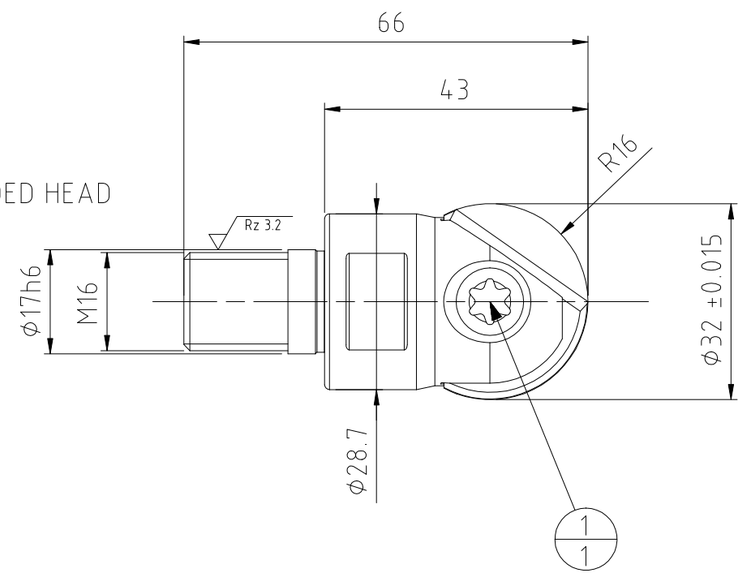

INSERT NOT INCLUDED

WEIGHT: 0,158Kg

PART	TYP	QUAN.	UT	MATERIAL NUMBER	DESCRIPTION	TECHNICAL SPECIFICATION	CUSTOMER NUMBER
-	-	-	-	-	-	-	-
-	-	-	-	-	-	-	-
1	-	1	PC	31161850	TORX-SCREW	M8X25-TX40-IP	-

BALANCING GRADE DIN ISO 1940-G
(COMPLETE ASSEMBLY)
AT R.P.M. -1

ADDITIONALLY TO VA-NO: 07.05.01 MARK WITH

THIS DRAWING REMAINS OUR EXCLUSIVE PROPERTY. IT IS ENTRUSTED ONLY FOR THE PURPOSE AGREED UPON AND MAY NOT BE USED FOR ANY OTHER PURPOSE. COPIES OR OTHER REPRODUCTIONS MAY ONLY BE MADE FOR THE PURPOSE AGREED UPON. NEITHER ORIGINALS NOR REPRODUCTIONS MAY BE TRANSMITTED OR OTHERWISE MADE ACCESSIBLE TO A THIRD PARTY WITHOUT OUR WRITTEN CONSENT.

MAPAL
Präzisionswerkzeuge
Dr. Kress KG

DIMENSIONAL TOLERANCES PER ISO 2768-F UNLESS OTHERWISE SPECIFIED

DIMENSIONS NOT SHOWN ARE MAPAL STANDARD

REGISTERED WITH GERMAN AND FOREIGN PATENT OFFICES

	DATE	NAME
DRAWN	15.05.2020	G.MONTINI
APP.		
CHK.		

SCALE: 1:1 FORMAT: A3

TITLE:
BALL AND TORIC MILLING CUTTER, SCREW-IN MILLING CUTTER, INDEXABLE

ORIGIN: AA1

TECHNICAL SPECIFICATION: IMB001-032-M016-Z02R-BM 32

MATERIAL NUMBER.: 31144218

DRAWING NO.: 607326836-000-00-EN1

INDEX: 00

REPLACES DWG. NO.:

REPLACED BY DWG. NO.:

SHEET V. SHEETS

JOB-NO.:

PROJECT-NO.:

SKETCH:

CUST.:

SIMILAR:

MACH.NO. STATION: SPINDLE:

PART-NAME.:

PART NO.:

MATERIAL:

OP-NO.: TOOL-NO.: HOLE-NO.:

BLATT/MAP/S.A3